Diritti riservati All rights reserved

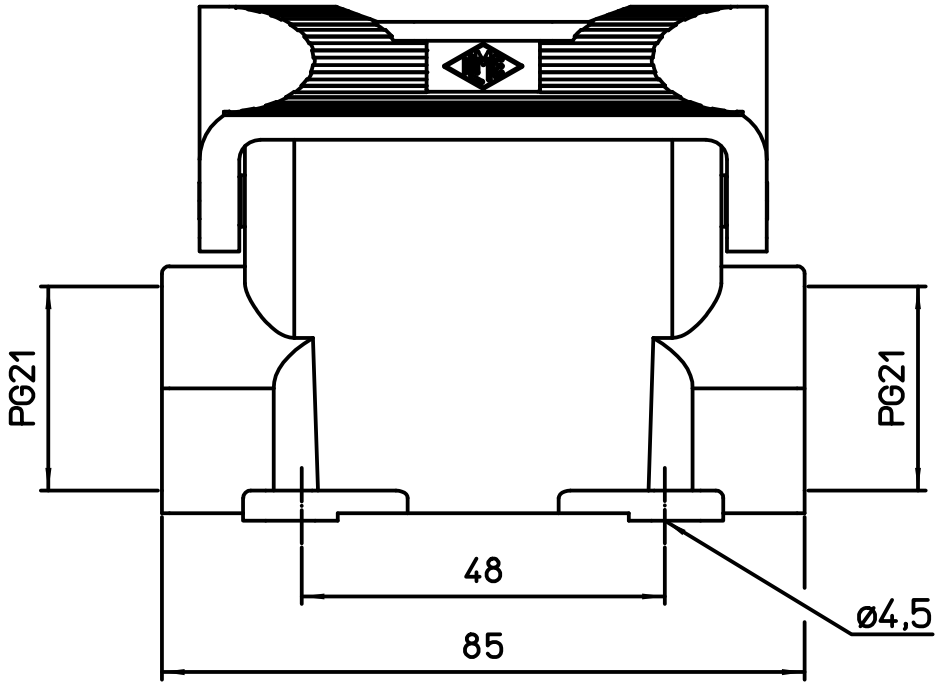

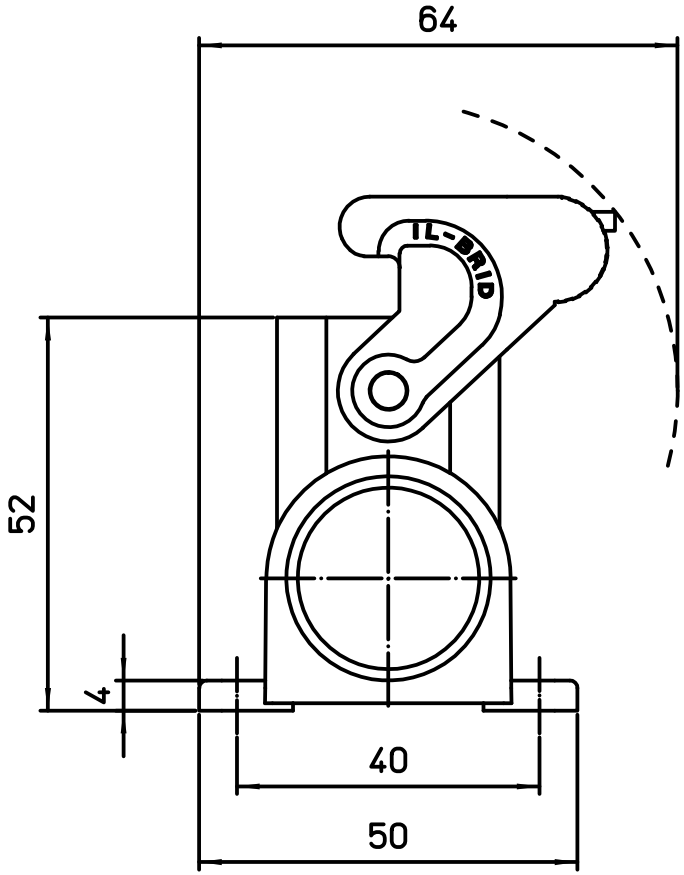

dimensions in mm	CZP 15 L221	Scale
Date 16/11/18	Surface mounting housing with single lever, 2xPG21	1:1
Sign. D.Cominelli		